LIBRARY
OF THE
MASSACHUSETTS INSTITUTE
OF TECHNOLOGY

HD28
M414
no. 683-73

MASS. INST. TECH.
FEB 6 1974
LIBRARIES

MASS. INST. TECH.
NOV 26 1973
DEWEY LIBRARY

WORKING PAPER
ALFRED P. SLOAN SCHOOL OF MANAGEMENT

AUTOMATED PLANNING AND OPTIMIZATION OF MACHINING PROCESSES: A SYSTEMS APPROACH

by

Krishna Challa* & P. Bruce Berra**

November 1973 683-73

MASSACHUSETTS
INSTITUTE OF TECHNOLOGY
50 MEMORIAL DRIVE
CAMBRIDGE, MASSACHUSETTS 02139

MASS. INST. TECH.
NOV 26 1973
DEWEY LIBRARY

AUTOMATED PLANNING AND OPTIMIZATION OF MACHINING PROCESSES: A SYSTEMS APPROACH

by

Krishna Challa* & P. Bruce Berra**

November 1973 683-73

1973

* Sloan School of Management, Massachusetts Institute of Technology

** Department of Industrial Engineering and Operations Research, Syracuse University.

HD28
.M414
no. 683-73

RECEIVED
MAY 30 1974
M. I. T. LIBRARIES

ABSTRACT

A system is presented that combines the automated planning and optimization functions in machining processes. The planning function is performed by a systematic analysis of the stated requirements of the finished part in the light of information on available machining facilities and raw materials. The optimization phase utilizes a mathematical programming model to take into account various costs and constraints under alternative machining conditions. A gradient or 'hill-climbing' algorithm is shown to be a convenient optimization technique for this class of problems. Implementation of the system is illustrated in some detail for the specific case of the face milling process.

071 521

INTRODUCTION

In conjunction with the recent advances in computer technology, modern industry is rapidly moving toward a completely automated factory. There has been considerable progress in the areas of computer-aided design as well as computer controlled manufacture. The field between the design and manufacturing stages that is receiving increased research attention is the area of automated planning and optimization of manufacturing processes. Automated Manufacturing-Planning (AMP) is a relatively new concept and most of its development has taken place in the sixties. In AMP design data are converted into manufacturing instructions that can be used to make the required finished component on the selected machine tool. The advantages of AMP are many. A uniformly high level of planning and optimization can be obtained regardless of work load. This in turn leads to shorter manufacturing cycles and better utilization of the available facilities and labor. Automated planning can also incorporate automated updating which takes into consideration day to day changes in available facilities, time standards, planning logic, etc.

The MILMAP system [15] and the AUTOPIT system [16] are among the first attempts for development of automated planning systems for machining problems. These systems achieve automated selection of speeds, feeds and other machining parameters, selection of suitable tools and also perform normal numerical control tape

preparation functions such as control of tool paths. Researchers at IBM [26] also developed their own "Automated Manufacturing Planning System" built on similar lines. The "Regenerative Shop Planning" proposed by Scott [18] may also be considered a AMP system, with the qualification that it is usable only when a number of geometrically similar parts are encountered so that the planning logic used in the manufacture of one part can be preserved and reused in planning of other parts.

Several German Universities and Industrial Organizations are developing the EXAPT system [19]. It is divided into three parts, the first for point to point drilling and milling, the second for straight cutting and contouring on lathes and the third for milling straight cuts and contours. The first two parts are commercially available while the third part is still under development [14].

The above systems do not, in general, consider the constraints on the selection of machining parameters that may be dictated by a variety of physical considerations in the machining process. Moreover, these systems focus on the planning phase, paying relatively little attention to optimization. They do not incorporate subsystems that explicitly optimize the various machining parameters. On the other hand, optimization of machining parameters has been attacked many times as a separate problem by a number of researchers including Taylor [20], Gilbert [9], Weill [25], Colding [8], Brewer and Reuda [5], and Okushima and Hitomi [13]. They all utilize empirical formulas for expressing tool life as a function of various machining parameters such as cutting speed, feed and depth of cut and most of them differentiate these expressions to obtain the optimum values of the parameters. However, there are difficulties in incorporating these analytical procedures into an automated planning system. Machining processes typically involve a large number of variables which change from one job to another and from one stage of machining to another. This makes the purely analytical methods, even in their simplest form, impractical for applications involving complex machining sequences involving large numbersof machines, tools and types of machining. Besides, most of these analytical procedures ignore the physical constraints on the process as well as the probabilistic nature of tool failures.

The present paper is an attempt at a systems synthesis of the planning and optimization phases. The goal is to arrive at a physically implementable manufacturing planning system that is 'self-optimizing'. This idea is not completely new. Berra and Barash [3,4] have developed an automated planning system for rough turning operations and optimized it using an empirical search procedure. A special feature of their work was the explicit consideration of the probabilistic nature of cutting tool failures. In follow on research, Batra and Barash [2] extended the work to consider multi-tool set-ups in turning operations. In the present work, it is shown that several features peculiar to machining processes make it particularly convenient to model the optimization phase as a mathematical programming problem. This optimization procedure overcomes most of the difficulties present in other analytical procedures, and at the same time blends smoothly into the planning logic.

SCOPE OF THE PRESENT WORK

A comprehensive system of automated manufacturing planning must include several different phases of planning and optimization such as: selection of jobs to be undertaken, determination of optimum quantities of manufacture, selection of broad machining sequence and then the detailed machining sequence at each stage, optimization of machining loading, routing and optimum combination of job schedules for the different jobs in the shop. In the present work, the main emphasis is on the phase of planning and optimization of machining sequences. The system suggested herein would thus be subsystem of a more comprehensive manufacturing planning system. However, in practical situations, this subsystem alone can be extremely complex. Moreover, it is this part of a manufacturing planning system that is most amenable to being run as automated 'self-optimizing' system. There is, of course, no ban on using this subsystem by itself in the absence of a comprehensive manufacturing planning system.

The system presented here accepts data on the specifications of the finished workpiece, selects the best raw material out of the available ones, determines the finishing and grinding allowances needed to achieve the required specifications, and hence the overall machining requirements and the exact amount of material (both shape and size) to be removed in each stage of the machining. It then optimizes the sequence of machining as well as values of the machining parameters at each stage. A detailed description of all machines, cutting tools and raw materials available for machining is assumed to be available.

The output of the system consists of a print out of the details of the selected raw material, machine, cutter, selected values of the machining parameters such as speed, feed, depth of cut and width of cut and a print out of the size of the machined piece after each stage of machining. It also provides an estimate of the total time required for the machining and the total cost of machining per piece.

A system block diagram for the planning procedure is given in Figure 1. The following abbreviations have been used for denoting the various data and output matrices.

CDM	Component Data Matrix
CDMFC	Finish Cut Component Data Matrix
CDMFG	Finish Grind Component Data Matrix
CDMRC	Rough Cut Component Data Matrix
CDMRG	Rough Grind Component Data Matrix
MCM	Machine Characteristics Matrix
MRM	Machine Requirement Matrix
RCSIZE	Rough Cut Size Matrix
RMCM	Raw Material Characteristics Matrix
TCM	Tool Characteristics Matrix

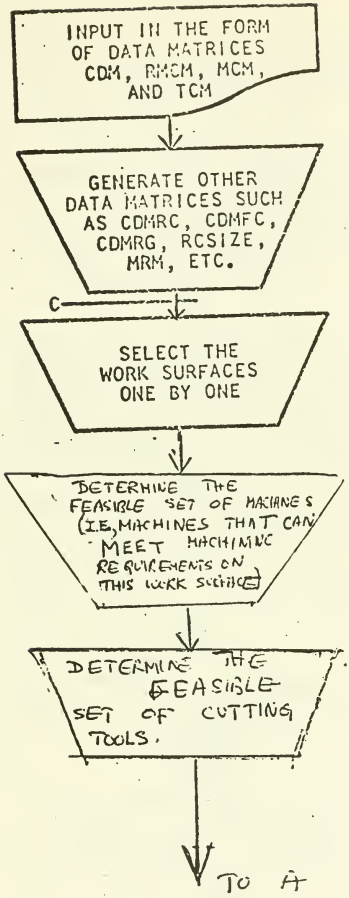

Figure 1. System Block Diagram

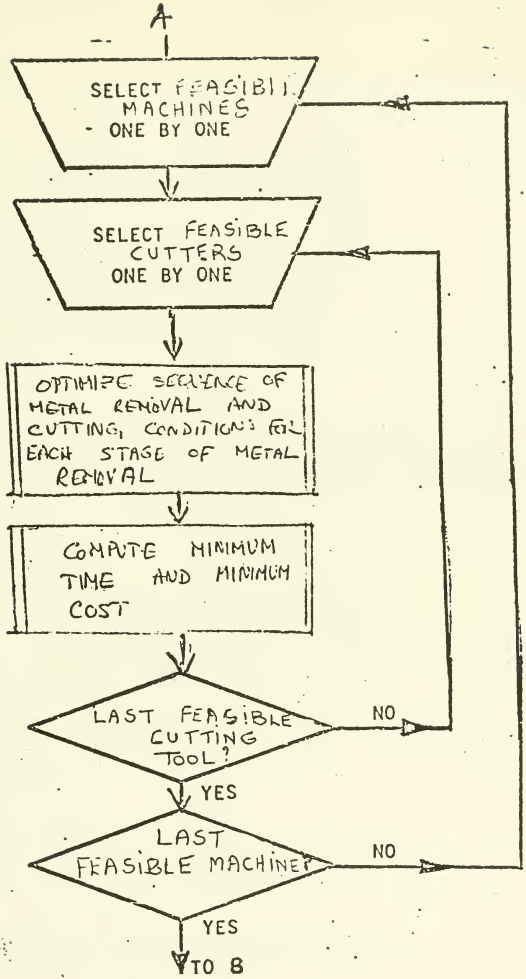

Figure 1. System Block Diagram (contd.)

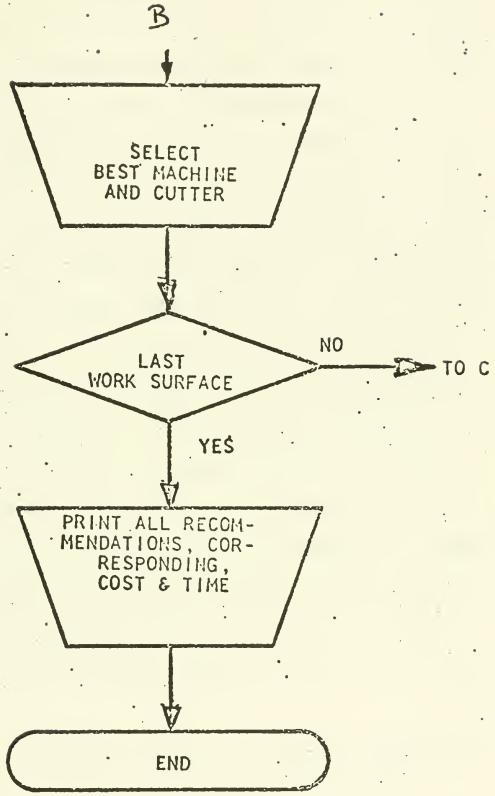

Figure 4. System Block Diagram (cont'd)

The input to the system consists of the data matrices CDM, RMCM, MCM and TCM. The CDM describes all the specifications of the workpieces to be machined including all dimensions, tolerances and surface finish grades needed. In the present system it is assumed that the machining of the part can be subdivided into the milling of a number of plain surfaces and hence each row in the CDM describes exactly one such plain surface. The RMCM gives a complete description of the size, shape and the material of the blank (or raw material). The MCM and TCM describe the various characteristics of the machines and tools to be considered. The specifications given in MCM include the maximum and minimum limits for spindle speed and feed rate on the machine, horsepower of the driving motor, efficiencies of the transmission of the machine and the driving motor, static stiffness and the cost rates for operators, setters and overheads. The TCM gives for each cutter, the number of teeth on the cutter, diameter of the cutter, length of the cutting edge, maximum force that can be resisted by the tooth tip and values of average change time and average regrinding time for each cutter.

The first matrix generated by the system is the Machine Requirement Matrix. The surface finish designation and the tolerance specification for the three dimensions of the work surface are considered jointly to determine the requirements of each surface i.e., whether each of the surfaces requires some or all of the operations: rough milling, finish milling, rough grinding and finish grinding.

The decision on the machine requirements is made based on the dimension which has the tightest tolerance specification or finest surface finish designation. The Machine Requirements Matrix is a pattern of 1's and 0's such that a '1' in the column opposite a surface number indicates that the particular machining operation must be performed on that surface. Appropriate machining allowances are then added to each of the dimensions of the work surface to generate the matrices CDMRC, CDMFC and CDMRG which describe the size and shape of the component after the rough milling, finish milling and rough grinding operations respectively. The system then checks if the raw material size specified in the RMCM is smaller or larger than that specified by the CDMRC. If it is smaller, it prints out an error message and goes to the next raw material specification. If larger, the system determines the amount of material to be removed from the given raw material to bring it to the size specified by CDMRC and stores it in the matrix RCSIZE. The system repeats this process for each of the acceptable raw materials. Thus, RCSIZE is actually a three dimensional array of numbers; each layer of the array corresponding to one raw material. The numbers in the array are the dimensions of the material to be removed in the milling operation for each work surface.Out of all acceptable raw materials, the best is chosen by the criterion of minimum total volume of material to be removed.

The system then selects the work surfaces one at a time and determines the set of 'feasible' machines and 'feasible' cutting tools for the work surface picked. (By 'feasible' machines, we mean machines that can meet the machining requirements of the chosen work surface; the definition of 'feasible' cutting tools is similar). Next, it chooses combinations of feasible machines and feasible cutting tools one by one, determines the optimum cutting conditions in each case and selects the combination that yields the minimum optimized cost. It then prints out the best machine, best cutter and the optimum machining parameters for that combination along with estimates of total cost and total time per machined piece.

The system concept suggested here is quite general and may be used for a wide variety of machining processes such as turning, milling, shaping, etc. Fortunately too, the similarities in physical characteristics of different machining processes are strong enough to permit use of the same optimization methodology. For instance, the functional relations between dependent variables (such as tool life and cutting forces) and independent variables (such as machining parameters) have the same general form for all machining processes. Specific formulations will indeed be needed for each type of machining and job environment, but the general operation and methodology of the system will be the same.

THE FACE MILLING PROCESS

Since the optimization phase requires consideration of certain physical details of the machining process, this phase will be illustrated for the specific case of a face milling process.

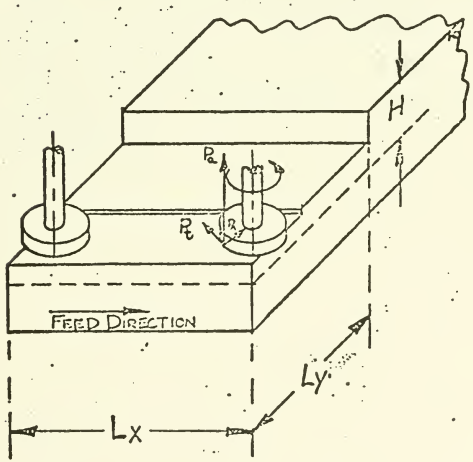

Figure 2: Face Milling

For the benefit of the unfamiliar reader, Figure 2 gives a very brief description of the face milling process. The face milling cutter has its cutting teeth on the end and is rotated by means of the spindle of the milling machine. Simultaneously, the work table moves in a longitudinal direction, thus removing a thickness of metal equal to the depth of cut given. At the end of each longitudinal stroke, a transverse 'feed' may be given to remove an adjacent longitudinal strip. The machining parameters of this process are therefore the depth of cut, feed rate, cutting speed and the width of cut. (There are also other parameters such as the rake angle of the teeth which have been left out of this illustration for simplicity.) The cutting forces generated at the tooth tip may be resolved into three components, viz. the radial force P_r, axial force P_a and the tangential force P_t.

OPTIMIZATION METHODOLOGY

The mathematical model for optimization essentially consists of a cost objective: function subject to a number of constraints that arise from the nature of the physical process of machining.[6]

The total unit cost of the milling operation consists mainly of three parts: machining and operating costs, tool costs and non-productive costs. The machining cost per unit is the cost of running the machine, cost of operator and overhead computed over the time taken for the machining of a single piece. The tool cost is made up of tool setting cost, tool regrinding cost and tool changing cost including cost of depreciation. Finally, the non-productive cost includes the cost of non-cutting time forced by the nature of the machining operation and is equal to the cost of operator labor and overhead computed over the non-cutting time.

In the case of the face milling operation, the machining time per piece t_1 and the non-cutting time t_2 are given by

$$t_1 = \sum_{i=1}^{n_{dep}} \sum_{j=1}^{n_{wid}} \frac{L_{ij}}{f_{ij} N_{ij} n_{ij}}$$

and

$$t_2 = \begin{cases} \sum_{i=1}^{n_{dep}} \sum_{j=1}^{n_{wid}} \frac{L_{ij}}{F_{rapid}} & \text{if a idle return stroke is needed} \\ 0 & \text{otherwise.} \end{cases}$$

where f is the feed per tooth (inches per tooth); F_{rapid} is the feed rate of the work table for rapid traverse in the return stroke (inches per minute); i,j are the subscripts used to denote the i'th pass in the depth direction and the j'th pass in the width direction; L is the length of travel of the cutter relative to the workpiece in each longitudinal stroke (inches); N is the number of Revolutions per minute of the cutter; n is the number of teeth on the cutter being used; n_{wid} is the number of passes required in the width direction; and n_{dep} is the number of passes in the depth direction. It may be noted that L is determined by the longitudinal dimension of the surface to be milled and the allowance needed for the cutter approach; n_{dep} is determined by the total thickness of material to be removed and the depth of cut given in each pass in the depth direction; and n_{wid} is determined by the width dimension of the milled surface and the width of cut used in each pass in the

width direction. The total cost of machining can be determined from a knowledge of t_1, t_2 and the relevant cost rates and the number of tool resettings and regrindings required for the machining of a single piece. It should be mentioned that the expected number of times the cutter is to be regrounded and reset during the machining of a single piece is given by $E[t_1/T]$ where T is a stochastic variable devoting the life of the cutter (i.e., the time it can be used for machining before failure occurs), and E[ ] stands for the expectation operator. Empirical formulas expressing E(T) as a function of the machining parameters are available in literature [10] and are generally of the form $E(T) = \frac{C_y}{d^x f^y N^z}$ where C_y and indices x,y,z are constants determined by the tool and work materials being used. For the present purposes, we shall approximate the expected number of tool failures (in a period of length t_1) by $t_1/E(T)$.[1]

The total unit cost of machining can be written as:

$$TC = t_1(C_1+C_2+C_3) + t_2(C_1+C_3) + (C_3+C_{set})t_{set}$$
$$+ (t_1/T) \quad [(C_3+C_{gr})t_{gr} + (C_3+C_{chg})t_{chg}]$$

---

1 The approximation holds very well for the case where tool failures are Poisson distributed and t_1 is fairly large relative to E(T). Both of these are very reasonable assumptions for most machining situations.

where C_1, C_2, C_3 are the rates for direct labor, operating overhead and fixed overhead respectively, t_{set}, t_{gr}, t_{chg} are respectively the times required for initial tool setting, tool regrinding and tool changing (including resetting) and C_{set}, C_{gr}, C_{chg} are the wage rates for tool setting, regrinding and changing.

The total unit cost of machining should be optimized with respect to the machining parameters such as the cutting speeds, feeds, depths and widths of cut. However, the choice of these machining parameters is restricted by a number of constraints that result from consideration of the physical process of milling and the limitation of the available facilities. For example, the spindle speed and feed used must lie within the range of maximum speeds and feeds available on the machine tool; the cutting forces should not exceed the maximum forces that can be resisted by the work and tool holding devices; the cutting power required should be less than the net power available from the driving motor of the machine and so on. Certain restrictions are also to be imposed to insure chatterless machining and to limit the probability of cutter failure during the machining of a single surface to a specified maximum.[1]

The major constraints for the case of face milling are stated below.[2] For notational simplicity, the subscripts i,j (denoting the sequential number of the pass in the depth and width directions) are

---

[1] This restriction is imposed because failure of the cutter during the machining of a single workpiece is extremely inconvenient and expensive in terms of time loss in resetting the machine and cutter in the middle of a pass.

[2] Once again, it should be noted that the constraints may look somewhat different for other machining processes, but will be of the same general forms.

omitted. Except when explicitly specified, the following constraints apply to each individual pass.

Speed Restrictions:

$$N_{min} \leq N \leq N_{max}$$

where N_{min} and N_{max} are the minimum and maximum available spindle speeds on the machine, respectively. There are, in addition, restrictions on the surface speed of the cutting edge relative to the workpiece. The peripheral speed is given by $V = (\pi DN/12)$, The surface speed constraints can then be written as:

$$\frac{12\ V_{min}}{\pi D} \leq N \leq \frac{12\ V_{max}}{\pi D}$$

where V_{min} is the minimum cutting speed to avoid the formation of built up edge on the tool tip. V_{max} is the maximum cutting speed for the prevention of excessive heating of the tool tip, and D is the cutter diameter in inches.

Feed Restrictions:

$$F_{min} \leq fnN \leq F_{max}$$

where F_{min} and F_{max} are the minimum and maximum feed rates available on the machine.

Depth of Cut Restrictions:

$$d \leq H$$

$$d \leq d_{max}$$

where H is the total depth of material to be removed after correcting for finishing allowances and d_{max} is the length of the cutting edge of each tooth of the cutter.

In addition, the total depth of material removed in the n_{dep} layers should equal H. i.e.,

$$\sum_{i=1}^{n_{dep}} d_i = H$$

Width of Cut Restrictions:

The width of cut w is limited to a maximum value w_{max}. For most face milling applications, $w_{max} = D$ so that

$$w \leq D$$

In addition, the total width of metal removed should equal W, the width of the workpiece. Hence,

$$\sum_{j=1}^{n_{wid}} w_j = W$$

Force Restriction:

The maximum resultant cutting force, P_{res}, at any tool tip must not exceed the maximum force that can be resisted by the tool tip, P_{max}. In the case of face milling,

$$P_{res} = \sqrt{P_t^2 + P_r^2} \leq P_{max}$$

where P_t and P_r are the tangential and radial cutting forces at the tool tip, respectively. The radial force in the case of face milling is found to be approximately 0.3 to 0.4 times the tangential cutting

force [4,12]. The tangential cutting force is generally computed by empirical formulas expressing it as a function of each of the machining parameters. One such formula known as the extended cutting force law is given by Kronenberg [10] and is of the form

$$P_t = C_p A_1^g G^h N^k$$

where A_1 is the modified area of the chip cross section and is given by $A_1 = df$, G is the slenderness ratio and is given by $G = d/f$, and g, h, and k are indices which depend upon the particular toolwork combination being used.

If $P_r = C_f P_t$, the cutting force restriction becomes,

$$\left(\sqrt{1 + C_f^2}\right) C_p d^{x_1} f^{y_1} N^{z_1} \leq P_{max}$$

where x_1, y_1 and z_1 are indices determined by the values of g, h, and k, and C_f is a constant.

<u>Horsepower Restriction</u>:

The total power available at the cutter must be enough to resist the cutting forces at the speeds being used. This requires that

$$\frac{P_{t-tot} \quad V}{33000} \leq (HP) \; \eta_{mach} \; \eta_{mot}$$

where HP is the horsepower of the driving motor, P_{t-tot} is the total of the tangential force components with all the teeth in contact with the workpiece, η_{mach} is the efficiency of power transmission in the machine, η_{mot} is the efficiency of the driving motor, and V is the peripheral velocity of cutting. P_{t-tot} assumes its maximum value when all the teeth of the cutter are in contact with the work surface, and, in this case, it is given by

$$P_{t-tot} = \frac{n}{2} P_t$$

Substituting this and the expression for peripheral speed V, the power constraint becomes

$$\frac{C_p}{33,000} \left(\frac{\pi D}{24} nd^{x_1} f^{y_1} N^{z_1+1}\right) \leq HP\ \eta_{mach}\ \eta_{mot}$$

<u>Restrictions to Avoid Excessive Vibrations and Chatter:</u>

Chatter is a function of both the cutting conditions and the machine structure; thus it is not easy to form constraints that will positively insure chatterless operation. Based upon experimental and theoretical research of Tobias [22], Tobias and Sadek [23], Lemon and

Long [11], and others, the following constraint is applied

$$\frac{n_c k_c}{\lambda} \leq k_v$$

where n_c is the number of edges cutting simultaneously, λ is the directional static stiffness of the machine frame (lbf/in.), k_c is the slope of cutting speed-cutting force curve, and k_v is a constant parameter indicating the safe region with respect to vibrations. (A typical value of k_c is 0.2). The maximum value of n_c is n/2 and

$$k_c = \frac{P_t'}{d} = C_p x_1 d^{x_1} f^{y_1} N^{z_1 - 1}$$

so that the chatter constraint becomes

$$z_1 d^{x_1} f^{y_1} N^{z_1 - 1} \leq \frac{2k_v \lambda}{nC_p}$$

Other researchers like Barash [2] suggest consideration of the chatter problem by a constraint on the chip slenderness ratio. In this work, the constraint used is

$$d/f \leq 50$$

Hopefully, these two constraints used together will keep the machining parameters in the region permissible with respect to chatter.

Restriction of Tool Life:

It is highly desirable that a freshly reground cutter last for at least the time required to machine a single workpiece. Failure of the cutting tool in the middle of machining is extremely inconvenient and expensive in terms of time lost in resetting the machine and cutter in the middle of a pass. However, since tool failure is inherently probabilistic in nature, this constraint can never be satisfied with absolute certainty. Hence, it is converted to a 'chance constraint' of the form

$$\Pr\{T \geq t_1\} \geq \alpha.$$

where α is chosen depending on the degree of assurance with which the tool life constraint is desired to be satisfied. It is obviously inconvenient to handle the tool life constraint in its probabilistic form directly. If the probability distribution of the tool life is known, the constraint can be transformed into a more convenient form by using the properties of the distribution. The foregoing inequality can be rewritten as

$$\Pr\left\{\frac{T - E(T)}{\sigma_T} \geq \frac{t_1 - E(T)}{\sigma_T}\right\} \geq \alpha$$

where E(T) and σ_T are the mean and standard deviation of the tool life respectively. Let K_α be a constant defined for the distribution to which T belongs such that

$$Pr\{\varepsilon \geq K_\alpha\} = \alpha$$

where ε is the standardized variate of the distribution. Using this notation,

$$Pr\left\{\frac{T - E(T)}{\sigma_T} \geq K_\alpha\right\} = \alpha$$

This probability increases as K_α decreases and vice versa. The tool life constraint can thus be expressed as

$$\frac{t_1 - E(T)}{\sigma_T} \leq K_\alpha$$

Substituting for t_1 and transforming,

$$\sum_{i=1}^{\eta_{dep}} \sum_{j=1}^{\eta_{wid}} \frac{L_{ij}}{f_{ij} N_{ij} \eta_{ij}} - \frac{C_y}{d^x f^y N^z} \leq K_\alpha \sigma_T$$

Very little experimental work has been done to establish the nature of the probability distribution of tool life. It is known, however [21], that two different types of tool failure are prominent in the case of

carbide tools, failure due to excess flank wear, and failure due to chipping. It can be expected that the probability distributions of life of the tool would be different for the two different modes of failure. The Poisson distribution has been suggested for tool failures by chipping [1] and some form of modified normal distribution for the tool failure by flank wear. The actual distribution of tool life would, therefore, be the composite distribution obtained by taking the weighted mean of the distributions in the case of the two different modes of failure, weightages being assigned on the basis of relative dominance of each mode of failure. Moreover, the failure of a milling cutter is governed by the failure of any one of its teeth and so the appropriate distribution is the distribution of the minimum of the lives of the individual teeth of the cutter. Therefore, the probability distribution of the life of a cutter has been derived from that of an individual tooth which in turn is obtained from the distributions of failures by chipping and failures by flank wear. With the distribution of T known, one can easily read off the value of K_α for any chosen value of α.

FINAL FORM OF THE OPTIMIZATION MODEL

The optimization problem as stated above is quite a formidable one, one with non-linear objective function and many non-linear constraints. By a detailed consideration of the nature of the objective function, nature of the constraints and the physical process of milling the reasonable modifications and simplifications of the above mathematical model have been made. It is also found convenient to define the transformed variables

$$x_1 = \log (d/d_{min})$$

$$x_2 = \log (f_n N_{min}/F_{min})$$

and

$$x_3 = \log (N/N_{min}).$$

Expressed in terms of those transformed variables, the above mathematical model can be shown to reduce to a convex objective function with a set of linear constraints. It reduces to the form

$$\text{Minimize } Z = e^{c_{10}+c_{11}x_1+c_{12}x_2+c_{13}x_3} + e^{c_{20}+c_{21}x_1+c_{22}x_2+c_{23}x_3}$$

subject to a number of constraints

$$a_{ij}x_j \pm b_i \leq 0 \qquad i = 1,\ldots,I \text{ and } j = 1,2,3.$$

$$x_j \geq 0$$

where the b_i s and c_{ij} s are functions of the constants and parameters of the model.

The technique of optimization employed is a version of the gradient projection method very similar to that suggested by Rosen [17]. This method belongs to the general class of 'hill-climbing' methods for optimization of non-linear functions. It always attempts to travel in the locally steepest direction of ascent (or descent) while not allowing the point to leave the constrained set. The optimum size of the step is then determined. Once the optimum is found on the line of steepest ascent, a new gradient evaluation is carried out and the procedure repeats itself until a point sufficiently close to the global optimum is reached.

Notice that the objective function we are encountered with is very smooth, convex and 'well-behaved' and satisfies all the regularity conditions needed for convergence. It is therefore reasonable to expect the procedure to converge in a relatively small number of iterations. Moreover, the objective function is composed of the sum of two exponential terms which makes it extremely easy to analytically compute the gradient vector at any stage of the iterative procedure.[1] It is precisely these features that make the gradient methods so convenient for this class of problems.

The optimization procedure is carried out by means of the computer program OPTIMIZE which is part of the software that comprises the planning and optimization system.

---

[1] This is by no means an accident; nor is it peculiar to the face milling process. It can be shown that the model will reduce to a similar form for most machining processes.

AN ILLUSTRATION OF THE USE OF THE SYSTEM

The use of the suggested system is illustrated below for the case of a very simple milled part shown in Figure 3. It is assumed that the raw material selection phase of the planning has been completed and the system has chosen the raw material shown in Figure 4. The dimensions, tolerances and surface finish specifications of the finished component are given by the Component Data Matrix (CDM) which is reproduced in Table 1. The machining of the part has been divided into five stages of milling, each stage corresponding to milling of a plain surface. The five rows of the CDM thus represent the dimensions and specifications of these five plain surfaces as they should appear after each stage of milling.

TABLE I

COMPONENT DATA MATRIX

	LENGTHS (INCHES)			TOLERANCES (THOUS.)			SURFACE FINISH GRADES		
NO	LX	LY	LZ	TOLX	TOLY	TOLZ	SFX	SFY	SFZ
1	14.00	5.00	8.75	999.00	999.00	50.00	0	0	4
2	8.75	5.00	12.50	999.00	999.00	30.00	0	0	5
3	12.50	8.75	4.00	999.00	999.00	10.00	0	0	8
4	12.50	4.00	2.50	999.00	999.00	10.00	0	0	5
5	4.57	6.00	3.00	999.00	999.00	5.00	0	0	10

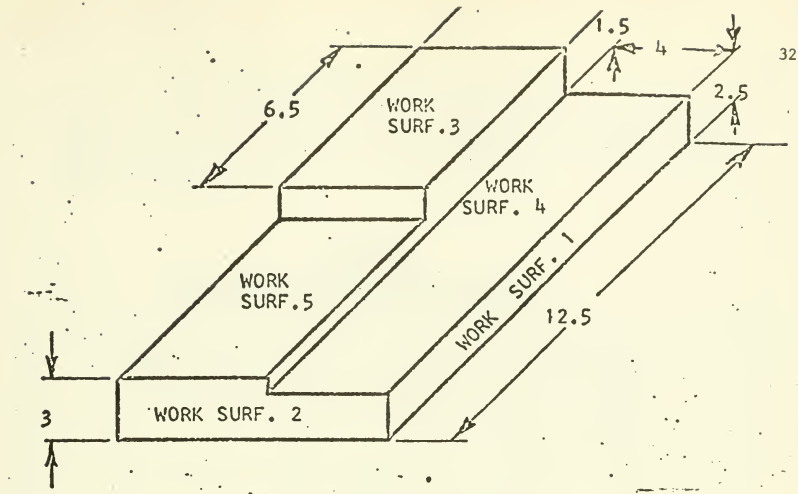

Figure 3. Finished Workpiece

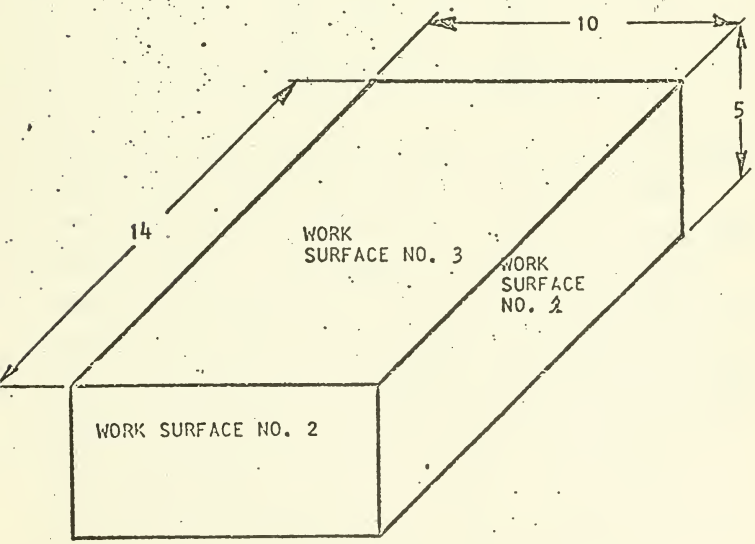

Figure 4. Raw Workpiece

The dimensions of the raw material for each stage of milling are given by the Raw Material Characteristics Matrix (RMCM) shown in Table II.

TABLE II

RAW MATERIAL CHARACTERISTICS MATRIX

WORK SURFACE NO.	LX	LY	LZ
1	14	5	10
2	8.75	5	14
3	12.5	8.75	5
4	12.5	4	4
5	4.75	6	4

It is assumed in this example that only two machines and two cutters are available and their specifications are given by the Machine Characteristics Matrix (MCM) and the Tool Characteristics Matrix (TCM) shown in Table III. In the Machine Characteristics Matrix, column headings NMIN and NMAX stand for the minimum and maximum spindle speeds available on the machines, FMIN and FMAX are the minimum and maximum feed rates available, HP is the horsepower of the driving motor, EFFY 1 and EFFY 2 are the efficiencies of the driving motor and the transmission of the machine respectively, LAMBDA is the stiffness of the machine frame, C1, C2, C3 are the different wage and overhead rates and TSET is the time required for setting the machines.

In the case of the Tool Characteristics Matrix, the columns read respectively, cutter number, number of teeth, diameter of the cutter, length of the cutting edge, maximum force that can be resisted by the tooth tip, time for regrinding and time for changing the cutter.

TABLE III

MACHINE CHARACTERISTICS MATRIX

NO.	NMIN	NMAX	FMIN	FMAX	HP	EFFY1	EFFY2	LAMBDA	C1	C2	C3	TS
1	30.0	800.0	0.2	5.0	20.0	0.7	1.0	210000.0	0.2	0.2	0.1	30.
2	40.0	500.0	0.3	3.0	15.0	0.7	0.9	110000.0	0.3	0.2	0.1	40.

TOOL CHARACTERISTICS MATRIX

NO.	TEETH	DIA	LEDGE	PMAX	TGR	TCHG
1	8	4.0	0.4	1000.0	190.0	75.0
2	12	6.0	0.2	2000.0	135.0	60.0

The program MODIFY[1] accepts the CDM, RMCM, MCM and TCM as data, determines the various machining requirements on each work surface and generates the Machine Requirements Matrix (MRM) described earlier in the article as well as the matrices CDMRG, CDMFC, CDMRC and RCSIZE. These matrices are reproduced in Table IV.

---

[1] All the programs named here are parts of the software that make up the system.

TABLE IV

MACHINE REQUIREMENT MATRIX

SURFACE NO	RC	FC	RG	FG
1	1	0	0	0
2	1	1	0	0
3	1	1	1	0
4	1	1	1	0
5	1	1	1	1

RDMRC

1	14.	5	8.8
2	8.75	5	12.57
3	12.5	8.75	4.08
4	12.5	4	2.58
5	4.75	6	3.085

CDMFC

1	14	5	8.75
2	8.75	5	12.52
3	12.5	8.75	4.03
4	12.5	4	2.53
5	4.75	6	3.035

CDMRG

1	14	5	8.75
2	8.75	5	12.5
3	12.5	8.75	4.01
4	12.5	4	2.51
5	4.75	6	3.015

CDMFG

1	14	5	8.75
2	8.75	5	12.5
3	12.5	8.75	4.
4	12.5	4	2.5
5	4.75	6	3.005

ROUGH CUT SIZE MATRIX

1	14	5	1.2
2	8.75	5	1.43
3	12.5	8.75	0.92
4	12.5	4	1.42
5	4.75	6	0.915

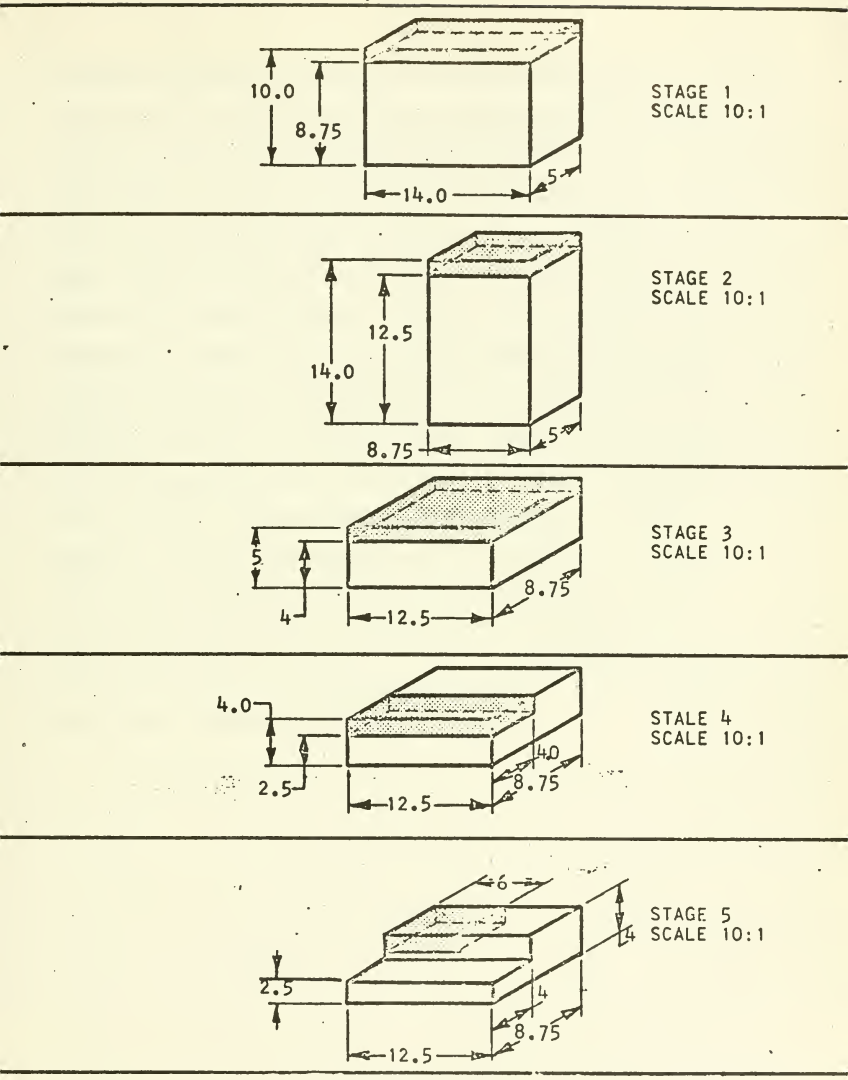

Figure 5. Optimum Sequence of metal removal for the sample part.

The program CALCULATE then uses the data generated by MODIFY to calculate the values of the various coefficients and constants in the constraint matrix and the objective function. The program CHOOSE considers all the available machine-cutter combinations (4 in this case) one after the other and uses the programs MODIFY, CALCULATE and OPTIMIZE to determine the optimum conditions for each combination. It then chooses the best combination of machine and cutter and the corresponding optimized machining parameters. These results, along with the number of passes required in the depth and width directions and estimates of total machining time and machining cost per piece are printed out by the system. For purpose of making comparisons and any necessary compromises, the optimized costs of machining with all other possible machine-cutter combinations also are printed out as supplementary data. The recommendations of the machines, cutters and machining parameters for each of the five work surfaces of the present example are presented in Table V.

TABLE V

RECOMMEND MACHINES, CUTTERS AND MACHINING PARAMETERS

WORK SURFACE NUMBER	MACHINE NUMBER	CUTTER NUMBER	CUTTER DIAMETER (INCHES)	NUMBER OF TEETH IN CUTTER	RPM OF CUTTER	FEED (10^{-3} INCHES PER TOOTH)	DEPTH OF CUT (INCHES)
1	1	1	4	8	71	5.7	0.240
2	1	2	6	12	80	4.0	0.178
3	1	2	6	12	80	4.0	0.184
4	1	1	4	8	71	5.7	0.284
5	1	2	6	12	80	4.0	0.183

WIDTH OF CUT (INCHES)	n_{DEP}	n_{WID}	ESTIMATED MACHINING TIME PER PIECE (MIN.)	ESTIMATED MACHINING COST PER PIECE
2.500	2	5	44.94	36.64
5.000	1	8	22.02	22.94
4.375	2	5	36.8	31.36
4.000	1	5	23.8	22.54
6.000	1	5	16.7	11.01

CONCLUDING REMARKS

The system concept presented herein is general enough to be applicable to a variety of machining processes and diverse machining environments. Of course, the detailed formulation of the planning and optimization models must be developed keeping in mind the features of the specific machining situation. For example, the minimum cost criterion has been used in the illustration given here, but this may or may not be the most appropriate criterion in a specific machining problem. Other authors have suggested various

other criteria such as maximum production rate [1] maximum profit [13], minimum time [3], etc. Similarly, while working on automatics employing several tools simultaneously, fixed tool servicing schedules might be preferable to changing the individual tools when failure is expected.

The authors believe that systems for automated manufacturing planning such as the one suggested in this article are likely to find wide practical utility in the near future. Manufacturing systems are typically complex and extremely dynamic. Development of such 'self-optimizing' units should prove to be a major technological advance for the manufacturing industry.

REFERENCES

1. Armerago, E.J.A., and Russell, J.K., "Maximum Production Rate as a Criterion for the Selection of Machining Conditions", International Journal of Production Research, Vol. 16, pp. 15-23, 1966.

2. Batra, J.L., and Barash, M.M., "Computer-Aided Planning of Optimal Machining Operations for Multi-Tool Set-ups with Probabilistic Tool Life", Report No. 49, Purdue Laboratory for Applied Industrial Control, Lafayette, Indiana, January 1972.

3. Berra, P.B., and Barash, M.M., "Automated Process Planning and Optimization for a Turning Operation", International Journal of Production Research, V. 7, No. 2, pp. 93-103, 1968.

4. Berra, P.B., and Barash, M.M., "Investigation of Automated Planning and Optimization of Metal Working Processes," Report No. 14, Purdue Laboratory for Applied Industrial Control, Lafayette, Indiana, July 1968.

5. Brewer, R.C., and Reuda, R., "A Simplified Approach to Optimum Machining", Engineer's Digest, V. 24, No. 9, pp. 133-151, September 9, 1963.

6. Challa, Krishna "An Investigation into the Automated Planning and Optimization of the Milling Process", Unpublished Master's Thesis, Syracuse University, Syracuse, New York, 1971.

7. Cincinnati Milling Machine Company, " A Treatise on Milling and Milling Machines", 1948.

8. Colding, B.N., "A Three Dimensional Tool Life Equation - Machining Economics", Journal of Engineering for Industry (Trans. of ASME), pp. 239-249, August 1959.

9. Gilbert, W.W., "Economics of Machining", Chapter in Machining Theory and Practice, American Society for Metals, 1950.

10. Kronenberg, M., "Machining Science and Application", Permagon Press, New York, 1966.

11. Lemon, J.R., and Long, G.W., "Survey of Chatter Research at Cincinnati Milling Machine Company", International Journal of Machine Tool Design and Research, 1966, pp. 545-586.

12. Maslov, P., Danilevsky, V., and Sasov, V., Engineering Manufacturing Processes, Foreign Languages, Publishing House, Moscow, USSR, 1963.

13. Okushima, K., and Hitomi, K., "A Study of Economical Machining (An Analysis of Maximum Profit Cutting Speed)", Memoirs of Kyoto University, V. 25, pp. 377-383, October 4, 1963.

14. Opitz, H., and Simon, W., "EXAPT 1 and EXAPT 2 Part Programmer Reference Manuals", EXAPT - Association, 51 Aachen, P.O. Box 587, Germany.

15. Peters, F.A., "Computer Assistance in Programming for Numerical Control", Machinery and Production Engineering (London), V. 108, pp. 572, March 16, 1966.

16. Richter, G., and Frankfurt, L.B., "Design and Practical Application of the AUTOPIT System", Machine Tool Engineering and Production News, English translation from Werkstatt und Betrieb (German), V. 99, pp. 98-104, April 1966.

17. Rosen, J.B., "The Gradient Projection Method for Non-linear Programming; Part I", Journal of the Society of Industrial Mathematics, V. 8, No. 1, pp. 181-217, March 1960.

18. Scott, R.B., "Regenerative Shop Planning", Special Report No. 586, American Machinist, pp. 89-94, March 28, 1966.

19. Spur, G., "Automatic Programming of Numerically Controlled Lathes", Proceedings of the International Machine Tool Design and Research Society, September 25-28, 1967.

20. Taylor, F.W., Proceedings of Institution of Engineers (London) pp. 258-289, 1946.

21. Taylor, J., "Carbide Tool Variance and Breakage - Unknown factors in Machining Economics", Proceedings of International Machine Tool Design and Research Society, 1967, pp. 487-504.

22. Tobias, S.A.,"Machine Tool Vibration," Wiley, 1965.

23. Tobias, S.A., and Sadek, M.M., Personal Communication, dated August 5, 1969.

24. Wagner, J.G., and Barash, M.M., "The Nature of the Distribution of Life of High Speed Steel Tools and the Significance in Manufacturing", Research Memorandum No. 69-2, School of Industrial Engineering, Purdue University, Lafayette, Indiana, May 1969.

25. Weill, R., "Optimizing Machining Conditions in Numerical and Adaptive Control", Proceedings of the 7th International Conference on Manufacturing Technology, Ann Arbor, pp. 569-580.

26. I.B.M., "Automated Manufacturing Planning," Manual No. E20-0146-0, I.B.M. Technical Publications, New York, 1967.

9/19/74